# MODEL KBT014265
# 1.4-26.5 GHz BIAS TEE

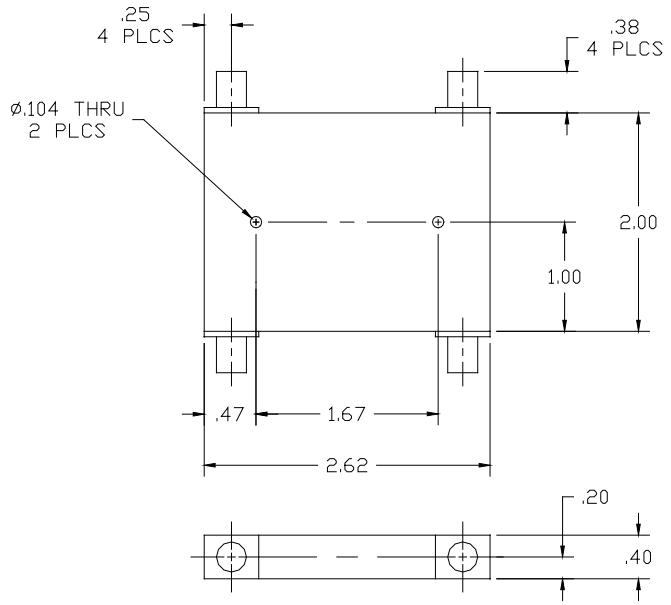


**DIMENSIONS (INCHES)**

## SPECIFICATIONS

| | |
|---|---|
| **FREQUENCY RANGE** | 1.4-26.5 GHz |
| **ISOLATION** | 10 dB |
| **IMPEDANCE** | 50 OHMS |
| **MAXIMUM VSWR** | 1.8 |
| **INSERTION LOSS** | < 6.0 dB |
| **DC CURRENT (MAX)** | 1.5 AMP |
| **DC VOLTAGE (MAX)** | 50 VOLTS |
| **POWER RATING** | 20 WATTS |
| **STANDARD CONNECTORS** | SMA Female |
| **DIMENSIONS (INCHES)** | 2.62 X 2 X 0.4 |
| **OPERATING TEMPERATURE** | -54º to +85º C |

1288 Anvilwood Ave. • Sunnyvale, CA 94089 • (408) 734-5999 • FAX: (408) 734-3017
Toll Free 1 (877) 734-5999 • www.krytar.com