KRYTAR, INC. • www.krytar.com
1288 Anvilwood Avenue • Sunnyvale, CA 94089 • Toll FREE: +1.877.734.5999 • FAX: +1.408.734.3017 • E-mail: sales@krytar.com

REVISIONS			
LTR	DESCRIPTION	DATE	APPROVED

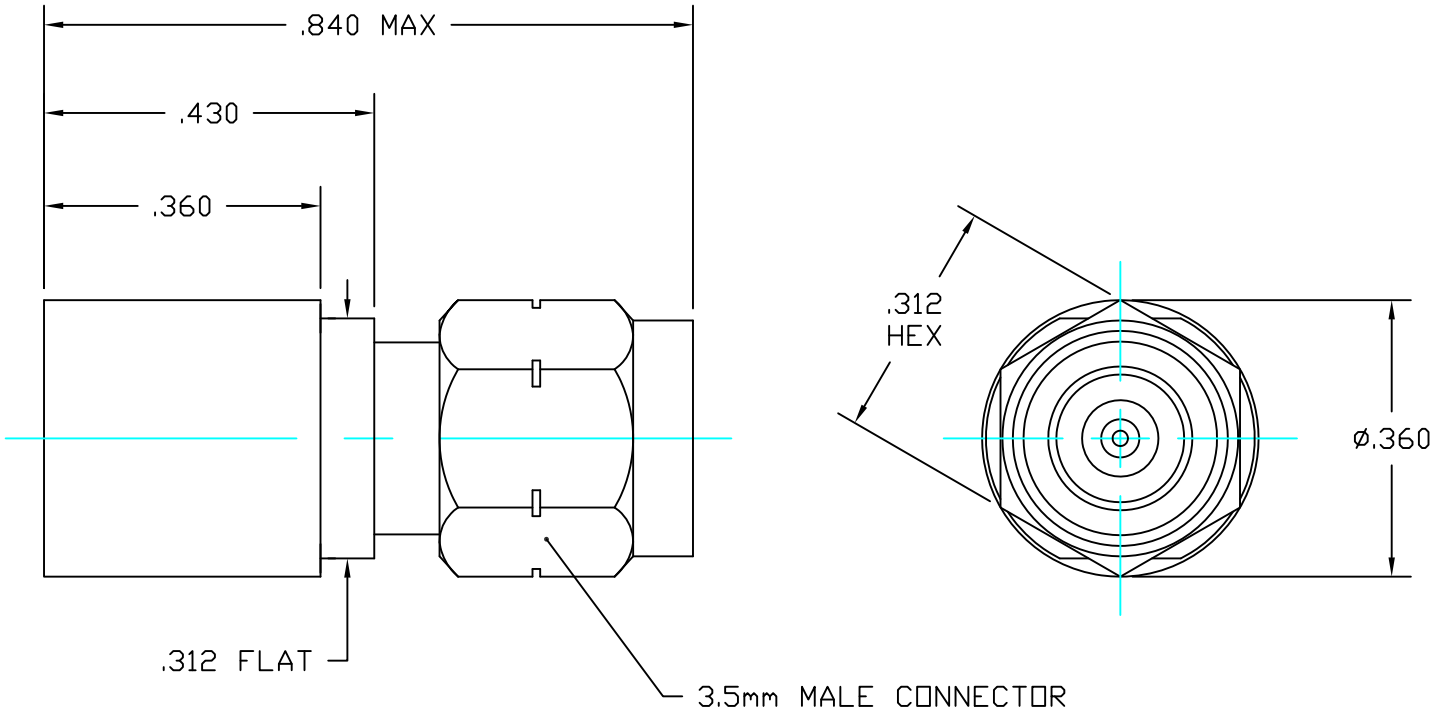

(DIMENSIONS IN INCHES)

MATERIAL-STAINLESS STEEL		APPROVALS	DATE	TITLE THERMAL VACUUM TERMINATION T2M-TV OUTLINE		
TOLERANCE ARE AS FOLLOWS UNLESS OTHERWISE NOTED:		DRAWN W. HERERIA	1/24/18			
		CHECKED		KRYTAR	SIZE A	DRAWING NO. 135-0164-000	REV
.XX - ±.010	∠'S - ±1°	APPROVED				
.XXX - ±.005					SCALE 4/1	SHEET 1 OF 1

FILE: 0164.DWG-105